SPECIFICATION

HYDRASTEP ELECTRODES

Hydrastep 459600602 Replacement Electrode

II-HE-002
Conductivity electrode

Full specification, variants, open points and ordering information. The same short screw-in envelope as the 802, with a brazed zirconia insulator for hotter, higher-pressure drums.

ENQUIRIES
info@indianainstrutech.com
+91 75033 02545
+91 92893 62447

ISSUED
24 October 2026

Hydrastep 459600602 Replacement Electrode

Indiana catalogue ID **II-HE-002** Hydrastep Electrodes

IDENTIFICATION

Product	**Hydrastep 459600602 Replacement Electrode**
Indiana catalogue ID	**II-HE-002**
Category	**Hydrastep Electrodes**
Measuring principle	**Conductivity electrode**
Document	**Specification · issued 24 October 2026**

01 Fit and interchange — original part

Connection	**Screw thread**
Seal	**Spiral-wound gasket**
Length	**45.5 mm tip to flange**
Tip diameter	**13.75 mm**
Cable connection	**Knurled nuts**

02 Construction and rating — original part

Body	**Stainless steel**
Insulator	**Brazed zirconia**
Maximum temperature	**340 °C (644 °F)**
Maximum pressure	**120 bar (1740 psi)**

03 Supplied electrode

Indiana catalogue ID	**II-HE-002**
Replacement part number	**Stated on the quotation**
Materials and rating	**Confirmed in writing with the quotation**

04 Tables

CROSS-REFERENCE

SYSTEM	MANUFACTURER	REFERENCE	LISTED AS	REPLACEMENT GROUP
Hydrastep	Delta Mobrey	459600602	Original part	Delta Mobrey / Hydrastep
Levelstate	Levelstate Systems	Type 851	Interchangeable with the original	Levelstate

05 Installation

1. 01 Isolate the water column from the drum, vent it to atmosphere and allow it to cool before removing an electrode.
2. 02 Unscrew the old electrode and clean the seat face in the column port; inspect it for steam cutting.
3. 03 Fit a new seal of the type the column calls for. Spiral-wound gaskets are not reused.
4. 04 Screw the electrode in by hand, then tighten to the column manufacturer's figure.
5. 05 Reconnect the probe cable and confirm the channel reads correctly in water and in steam before returning to service.

06 Applications and industries

APPLICATIONS

- Boiler steam drum level indication with conductivity water columns
- Replacement electrode for Hydrastep 459600602 ports
- Replacement electrode for Levelstate Type 851 ports

INDUSTRIES

Power generation | Process steam

07 Views

PRIMARY VIEW Screw-thread electrode, Hydrastep 459600602 form — 3D illustration
Illustration

ALTERNATE VIEW Cable end and connection — 3D illustration
Illustration

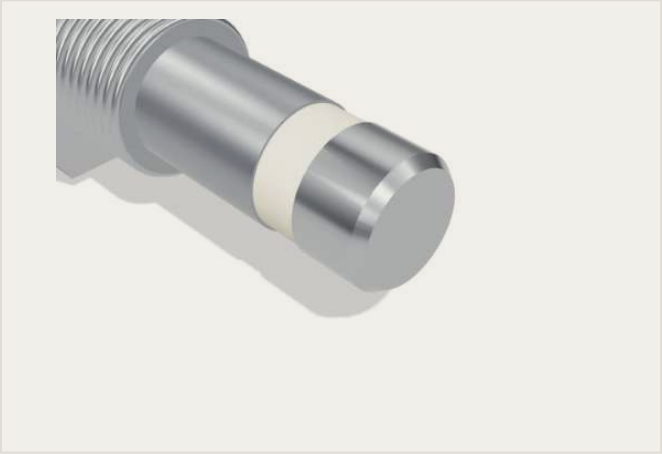

DETAIL Tip and insulator, Ø13.75 mm tip — 3D illustration
Illustration

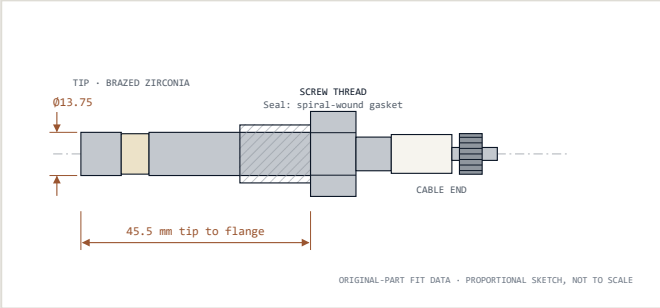

TECHNICAL Fit dimensions of the original part — drawn from the published values, not to scale
Illustration

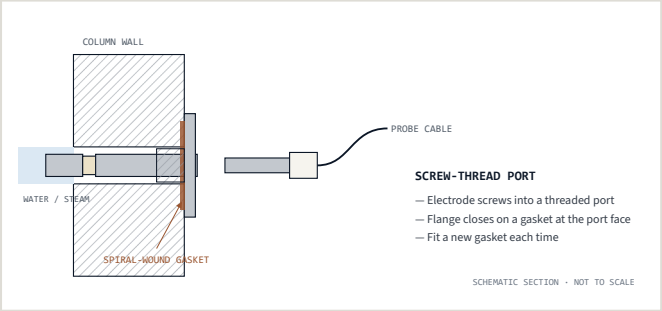

INSTALLATION Screw-thread mounting in the column port — schematic
Illustration

08 Ordering

Quote reference	**II-HE-002**
Model / variant options	**Hydrastep 459600602 · Levelstate Type 851**
Lead time, terms, documentation	**Confirmed in the quotation**

TO PREPARE A QUOTATION WE NEED

- Reference stamped on the electrode being replaced
- Water column or level system model
- Number of electrodes
- Drum operating pressure and temperature

TELEPHONE
+91 75033 02545
+91 92893 62447

EMAIL
info@indianainstrutech.com

QUOTATION
List the product, ID and quantity; add process conditions. We reply with a quotation.

CONFIRM BEFORE ORDERING

- The fit and rating values on this page are those published for the original part. The part number, materials and rating of the electrode supplied are stated on the quotation.
- Check the reference stamped on the electrode being replaced, or the model of the water column, before ordering.
- The 459600602 and 459600802 share an envelope but not a rating. Confirm which one the column uses.

System and manufacturer names identify the part being replaced. They are trademarks of their owners; INDIANA INSTRUTECH is not affiliated with them.

Original-part fit and rating values from published cross-reference datasheets (drumlevel.com, October 2026). Values are reproduced from the source documentation as stated there; where a source gives two different values for the same property, both are shown with their source. Unstated values are listed under “Open points”. This document is not a certificate, and no approval, certification or hazardous-area suitability is implied. INDIANA SALES (INDIANA INSTRUTECH) · info@indianainstrutech.com · +91 75033 02545 · +91 92893 62447 · issued 24 October 2026.