SPECIFICATION

HYDRASTEP ELECTRODES

Levelstate Type 871 Replacement Electrode

II-HE-013
Conductivity electrode

Full specification, variants, open points and ordering information. A compression-fitting electrode descended from the Clark Reliance RZ020BRZRK.

ENQUIRIES
info@indianainstrutech.com
+91 75033 02545
+91 92893 62447

ISSUED
24 October 2026

Levelstate Type 871 Replacement Electrode

Indiana catalogue ID **II-HE-013** Hydrastep Electrodes

IDENTIFICATION

Product	**Levelstate Type 871 Replacement Electrode**
Indiana catalogue ID	**II-HE-013**
Category	**Hydrastep Electrodes**
Measuring principle	**Conductivity electrode**
Document	**Specification · issued 24 October 2026**

01 Fit and interchange — original part

Connection	**Swagelok-style compression fitting**
Seal	**Taper seat**
Length	**71 mm tip to seat**
Tip diameter	**13.75 mm**
Cable connection	**Knurled nuts**

02 Construction and rating — original part

Body	**Stainless steel**
Insulator	**Brazed zirconia**
Maximum temperature	**370 °C (698 °F)**
Maximum pressure	**207 bar (3000 psi)**

03 Supplied electrode

Indiana catalogue ID	**II-HE-013**
Replacement part number	**Stated on the quotation**
Materials and rating	**Confirmed in writing with the quotation**

04 Tables

CROSS-REFERENCE

SYSTEM	MANUFACTURER	REFERENCE	LISTED AS	REPLACEMENT GROUP
Levelstate	Levelstate Systems	Type 871	Interchangeable with the original	Levelstate
Clark Reliance	Clark Reliance	RZ020BRZRK	Original part	—

05 Installation

1. 01 Isolate the water column from the drum, vent it and allow it to cool before opening the fitting.
2. 02 Withdraw the old electrode and inspect the fitting body and seat.
3. 03 Insert the new electrode to its full depth so the taper seats, then make up the compression fitting.
4. 04 Tighten to the column manufacturer's figure.
5. 05 Reconnect the probe cable and prove the channel in water and in steam before returning to service.

06 Applications and industries

APPLICATIONS

- Boiler steam drum level indication with conductivity water columns
- Replacement electrode for Levelstate Type 871 ports

INDUSTRIES

Power generation | Process steam

07 Views

PRIMARY VIEW Compression-fitting electrode, Clark Reliance RZ020BRZRK form — 3D illustration
Illustration

ALTERNATE VIEW Cable end and connection — 3D illustration
Illustration

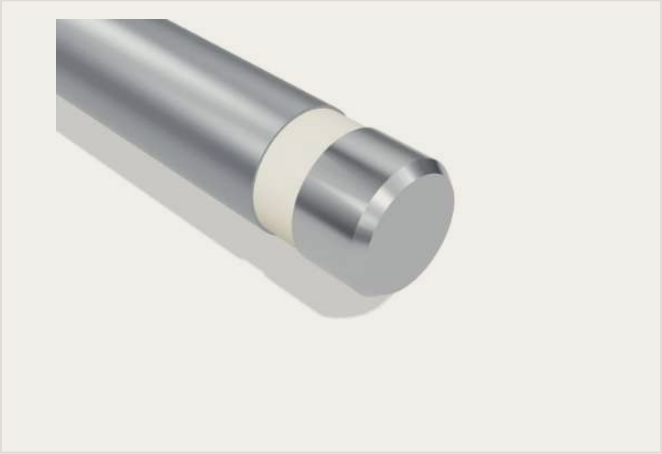

DETAIL Tip and insulator, Ø13.75 mm tip — 3D illustration
Illustration

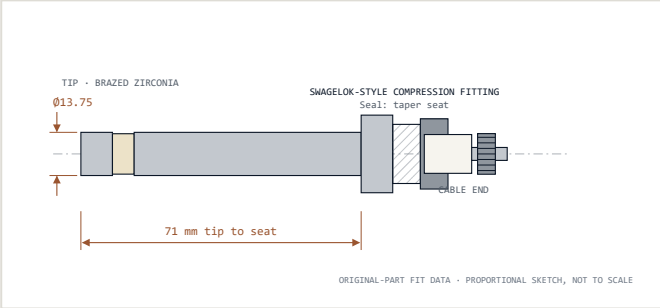

TECHNICAL Fit dimensions of the original part — drawn from the published values, not to scale
Illustration

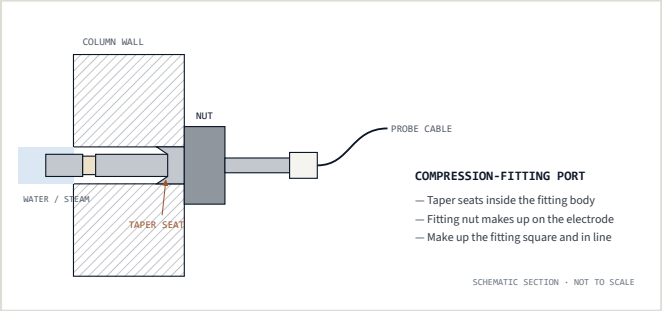

INSTALLATION Compression-fitting mounting in the column port — schematic
Illustration

08 Ordering

Quote reference	**II-HE-013**
Model / variant options	**Levelstate Type 871 · Clark Reliance RZ020BRZRK**
Lead time, terms, documentation	**Confirmed in the quotation**

TO PREPARE A QUOTATION WE NEED

- Reference stamped on the electrode being replaced
- Water column or level system model
- Number of electrodes
- Drum operating pressure and temperature

TELEPHONE
+91 75033 02545
+91 92893 62447

EMAIL
info@indianainstrutech.com

QUOTATION
List the product, ID and quantity; add process conditions. We reply with a quotation.

CONFIRM BEFORE ORDERING

- The fit and rating values on this page are those published for the original part. The part number, materials and rating of the electrode supplied are stated on the quotation.
- Check the reference stamped on the electrode being replaced, or the model of the water column, before ordering.
- Type 871 and Type 802 share dimensions but are listed as different parts. Confirm the reference on the column.

System and manufacturer names identify the part being replaced. They are trademarks of their owners; INDIANA INSTRUTECH is not affiliated with them.

Original-part fit and rating values from published cross-reference datasheets (drumlevel.com, October 2026). Values are reproduced from the source documentation as stated there; where a source gives two different values for the same property, both are shown with their source. Unstated values are listed under “Open points”. This document is not a certificate, and no approval, certification or hazardous-area suitability is implied. INDIANA SALES (INDIANA INSTRUTECH) · info@indianainstrutech.com · +91 75033 02545 · +91 92893 62447 · issued 24 October 2026.